WARN INDUSTRIAL WINCH	WINCH MODEL	PART NUMBER	TYPE
	SERIES 12 DC	PN 30289	**12V ELECTRIC**

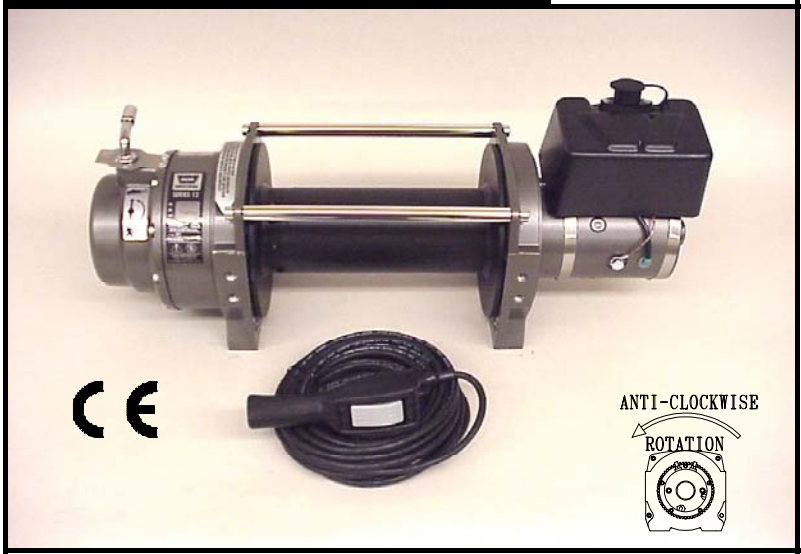

05/19/03

The Series 12 DC features a weatherproof industrial contactor and heavy duty remote control. The disc brake is designed for extended power-out use and the motor is protected by a thermal overload switch. Designed to meet SAE J706 and CE standards.

ENGINEERING DATA:

- **Maximum rated load :** 12000 lbs (5440kg)
- **Maximum wire rope recommended:** 1/2" 26600 lbs (12091kg) minimum breaking strength
- **Drum barrel diameter:** 4.0" (102 mm)
- **Drum flange diameter:** 8.24" (209 mm)
- **Distance between flanges:** 9.95" (253 mm)
- **Contactor:** Industrial contactor with 32' (10 M) heavy duty remote control
- **Approximate shipping weight:** 103 lbs (47 kg)
- **Gear ratio:** 315:1
- **Motor:** 12 volt DC series wound 2.5 hp (1.87KW)

STANDARDS COMPLIANCE:

- SAE J706
- NFPA 1901-73
- CE Machinery Directive 98/37/EEC

PERFORMANCE DATA:

LAYER	LINE LOAD		LINE SPEED		3/8" WIRE ROPE CAPACITY	
	lb.	kg	ft/min.	m/min.	ft.	meters
1	12000	5400	4.0	1.3	24	7.3
2	10140	4610	4.7	1.5	53	16.2
3	8840	4020	5.4	1.8	87	26.5
4	7850	3570	6.1	2.0	126	38.4
1 st LAYER	**LINE LOAD**		**LINE SPEED**			**DUTY CYCLE**
	lb.	**kg**	**ft/min.**	**m/min.**	**amps**	**min/10 min**
	0	0	15.3	4.7	107	3.1
	3000	1350	10.5	3.2	229	2.6
	6000	2700	7.6	2.3	313	2.0
	9000	4100	5.4	1.6	397	1.0
	12000	5400	4.0	1.2	481	0.5

AVAILABLE ACCESSORIES:

- **O**verLoad **I**nterrupt
  -pn 61929
- Roller Fairlead
  - pn 24336 (black)
  - pn 30859 (chrome)
- Tensioner Kit
  - pn 31149
- Remote clutch kit
  - pn 38316 (mechanical)
  - pn 31256 (air)

WARN INDUSTRIES, INC. INDUSTRIAL PRODUCTS

12900 S.E. Capps Road, Clackamas, OR USA 97015-8903
Customer Service (in North America): 1.800.543.9276
Customer Service (International): 1.503.722.3054
Fax:1.503.722.3000 www.warn.com

WARN INDUSTRIAL WINCH	WINCH MODEL	PART NUMBER	TYPE
	SERIES 12 DC	PN 30289	**12V ELECTRIC**

DIMENSIONAL DATA

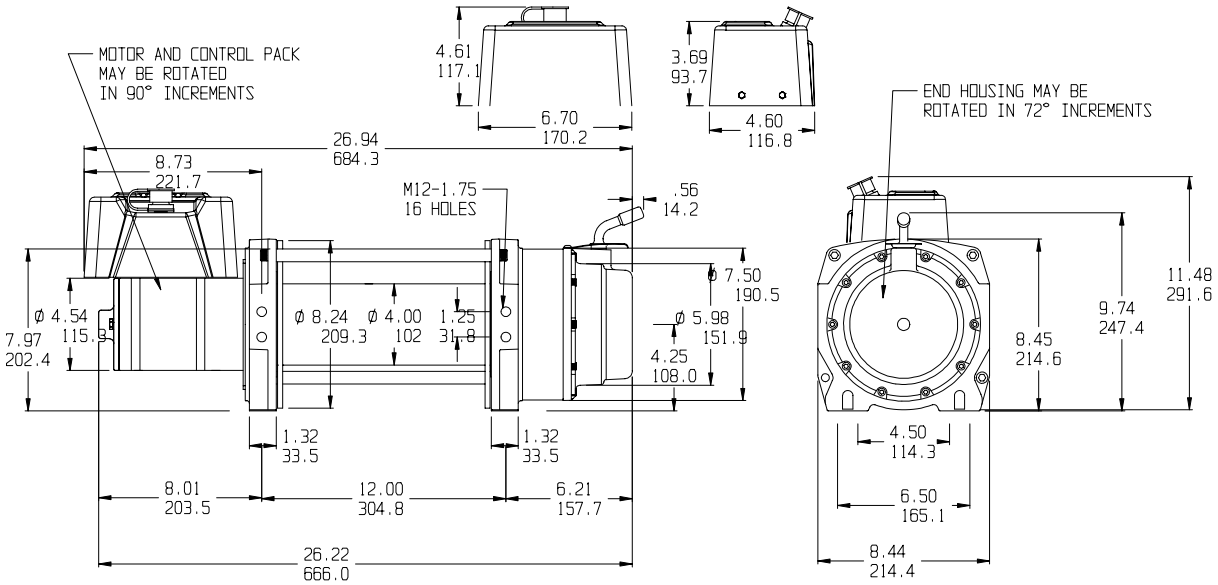

REPLACEMENT PARTS

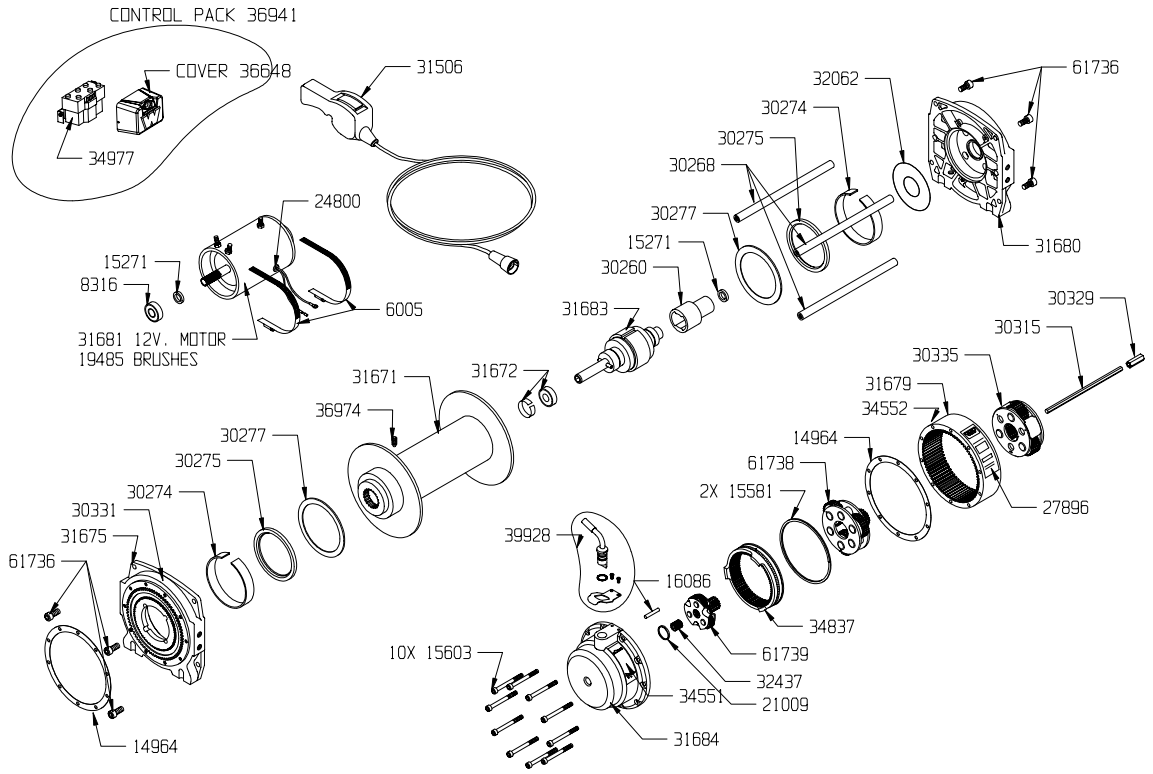

WARN INDUSTRIES, INC. INDUSTRIAL PRODUCTS

12900 S.E. Capps Road, Clackamas, OR USA 97015-8903
Customer Service (in North America): 1.800.543.9276
Customer Service (international): 1.503.722.3008
Fax:1.503.722.3000 www.warn.com

© 2005 Copyright Warn Industries, Inc. All rights reserved.