WARN INDUSTRIAL WINCH	WINCH MODEL	PART NUMBER	TYPE
	SERIES 9 HYD	PN 30282	**HYDRAULIC 4.8 cu in**

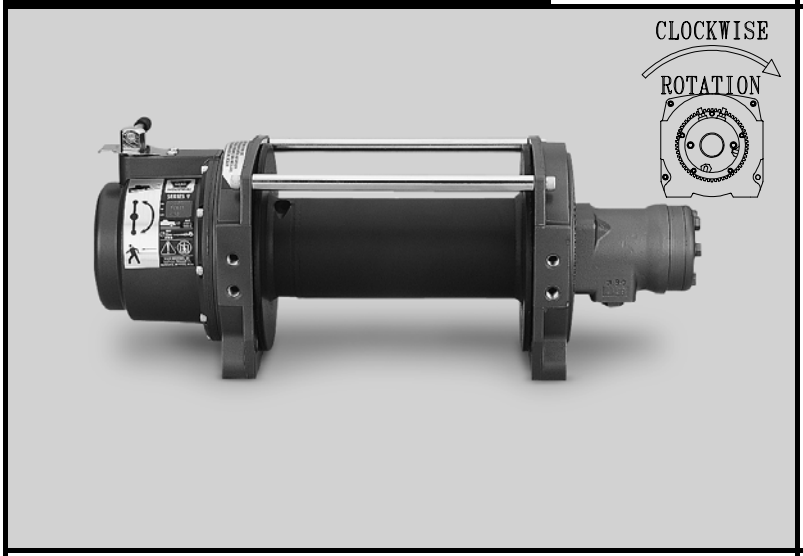

07/17/02

The Series 9 hydraulic features a 2-stage planetary gear train with a total reduction of 27:1. This winch uses a heavy duty automatic disc brake and a locking clutch lever. The 4” (102mm) steel drum provides excellent durability for the wire rope. Designed to meet SAE J706 and CE standards.

ENGINEERING DATA:

- **Maximum rated load :** 9000 lbs (4091kg)
- **Maximum wire rope recommended:** 1/2” 26600 lbs (12091kg) minimum breaking strength
- **Maximum input flow:** 16 USGPM (60 L/MIN)
- **Drum barrel diameter:** 4.0” (102 mm)
- **Drum flange diameter:** 8.24” (209 mm)
- **Distance between flanges:** 9.95” (253 mm)
- **Hydraulic Motor:** 4.8 cu in (78.7 cc)
- **Gear ratio:** 27:1
- **Approximate shipping weight:** 77 lbs (35 kg)

STANDARDS COMPLIANCE:

- SAE J706
- NFPA 1901-74

PERFORMANCE DATA:

LAYER	LINE LOAD		LINE SPEED at 15 GPM (57 l/min.)		WIRE ROPE CAPACITY 3/8" WIRE ROPE	
	lb.	kg	ft/min.	m/min.	ft.	meters
1	9000	4091	31	9.5	24	7.3
2	7670	3486	37	11.2	53	16.2
3	6710	3050	43	13.0	87	26.5
4	5940	2700	48	14.8	126	38.4

1 st LAYER	LINE LOAD		PRESSURE DROP	
	lb.	kg	psi	bar
	0	0	300	21
	3000	1364	950	66
	6000	2727	1450	100
	9000	4091	1900	131

AVAILABLE ACCESSORIES:

- Roller Fairlead
  - pn 24336 (black)
  - pn 30859 (chrome)
- Wire rope tension plate
  - pn 31149
- Remote clutch kit
  - pn 38316 (mechanical)
  - pn 31256 (air)

WARN INDUSTRIES, INC. INDUSTRIAL PRODUCTS

12900 S.E. Capps Road, Clackamas, OR USA 97015-8903
Customer Service (in North America): 1.800.543.9276
Customer Service (international): 1.503.722.3008
Fax:1.503.722.3000 www.warn.com

WARN®

WARN INDUSTRIAL WINCH	WINCH MODEL	PART NUMBER	TYPE
	SERIES 9 HYD	PN 30282	**HYDRAULIC 4.8 cu in**

DIMENSIONAL DATA

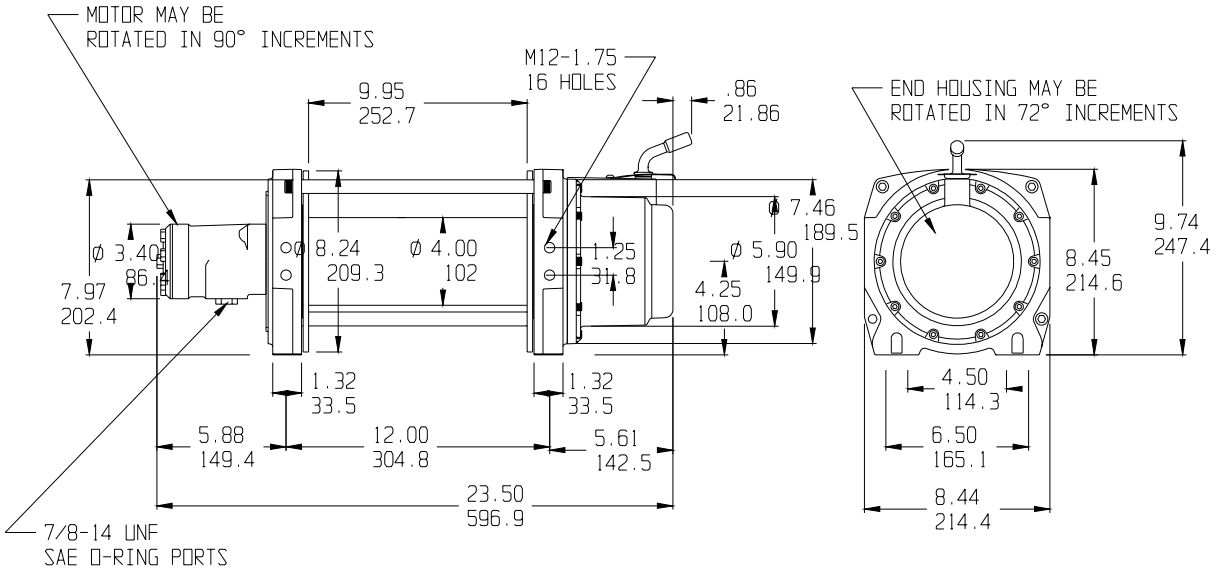

REPLACEMENT PARTS

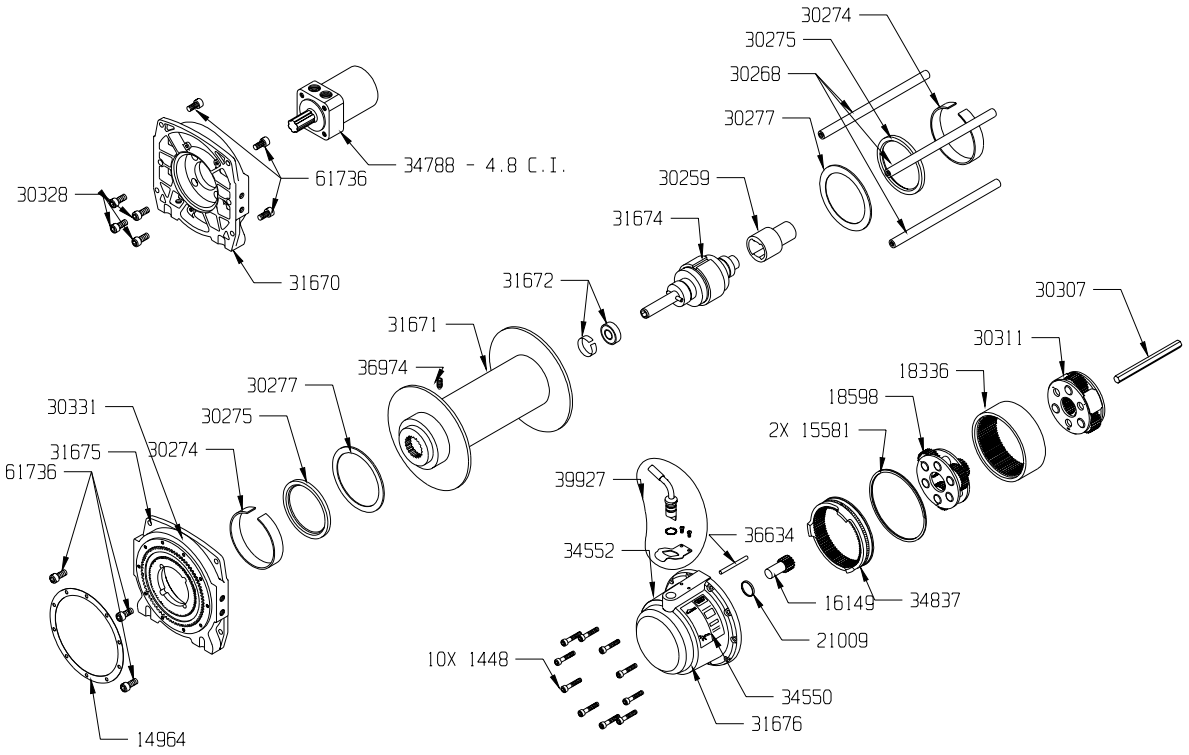

WARN INDUSTRIES, INC. INDUSTRIAL PRODUCTS

12900 S.E. Capps Road, Clackamas, OR USA 97015-8903
Customer Service (in North America): 1.800.543.9276
Customer Service (international): 1.503.722.3008
Fax:1.503.722.3000 www.warn.com

© 2005 Copyright Warn Industries, Inc. All rights reserved.