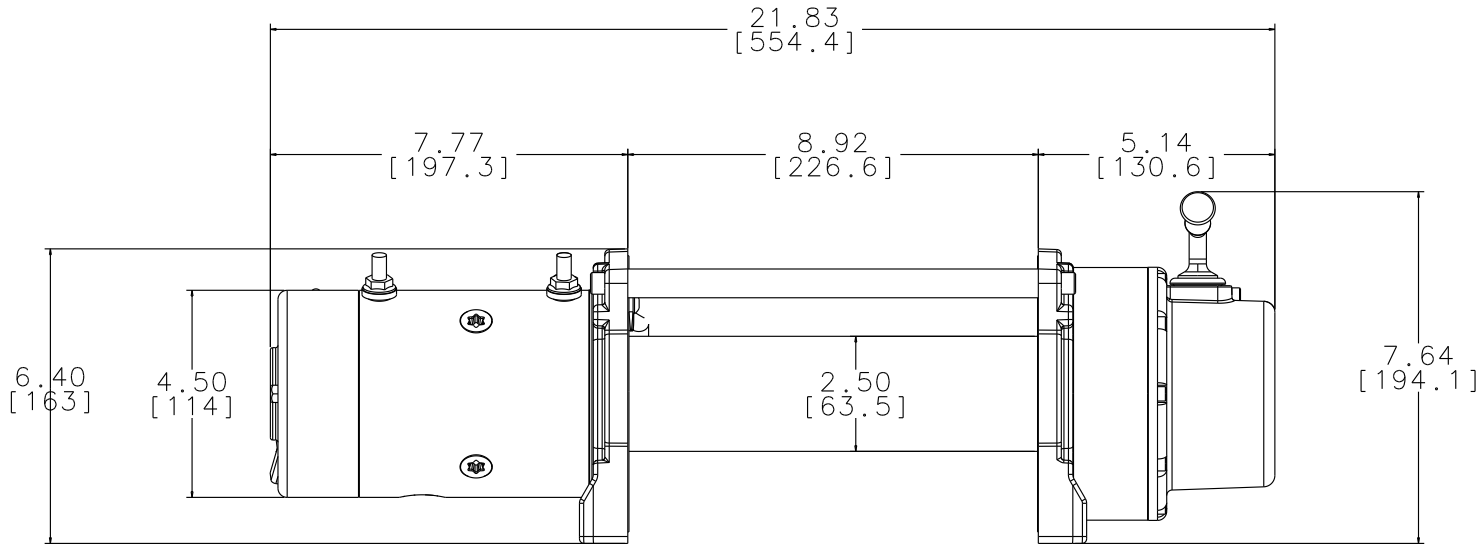
21.83
[554.4]
7.77
[197.3]
8.92
[226.6]
5.14
[130.6]
6.40
[163]
4.50
[114]
2.50
[63.5]
7.64
[194.1]